Linearization Conditions for Two and Four Stage Circuit Topologies Including Third Order Nonlinearities

Thomas P. Weldon
U. N. Carolina at Charlotte
tpweldon@uncc.edu

Geng Ye
U. N. Carolina at Charlotte
gye@uncc.edu

Raghu K. Mulagada
U. N. Carolina at Charlotte
rkmulaga@uncc.edu

Abstract

Recently, a novel set of simple conditions were presented for canceling third order nonlinearity in a two-stage amplifier topology. In the present work, detailed linearization conditions are developed for a four-stage topology, expanding upon a prior brief outline of the method. The proposed four-stage topology offers potential advantages in integrated circuit implementation of feedforward linearization, where bulky passive couplers can be replaced by well-matched active circuits. Although the primary focus is on elimination of third order nonlinearities, the approach is readily extended to other order nonlinearities and alternative circuit topologies. In the development, linearization conditions are derived in terms of the gains, intercept points, and coupling coefficients of the devices. The approach provides a more straightforward treatment than more common polynomial-based analysis. In essence, the present methods take a spectral viewpoint, where nonlinear components generated in the frequency spectrum are considered throughout the system and cancelled at the final output. For the two-stage and four-stage topologies, an uncomplicated set of linearization conditions are provided in terms of device characteristics.

1. Introduction

In radio receivers, nonlinear distortion limits the ability to receive weak signals in the presence strong signals. In radio transmitters, nonlinear distortion leads to spectral regrowth that causes interference in adjacent frequency channels. Although a variety of approaches have been proposed to mitigate nonlinearity with varying success, researchers continue to search for new linearization methods.

Recently, a simple set of conditions was presented for cancellation of third-order nonlinearity in a simple feedforward topology comprised of two amplifier stages with equal-amplitude couplers [1]-[2]. In this earlier work, experimental results confirmed the efficacy of the theoretical approach and demonstrated that phase matching and amplitude matching issues could be overcome in practical circuits. In addition, an extremely brief result was given for linearization in a four-stage topology, without any theoretical development [2]. In the present article, the underlying theoretical results are extended to a wider range of circuit topologies and the framework is laid for extension of results to nonlinearities of any order.

Beyond the specific problems considered below, the overall linearization approach also provides insight for the development of alternative topologies and alternative circuit configurations. In particular, the four stage topology that is discussed later can be considered as a conventional feedforward topology with delay lines replaced by amplifiers. In this four stage linearization approach, the nonlinearities and gains of the amplifiers (replacing delay lines) may be taken into consideration such that overall cancellation of nonlinearity is preserved. Such elimination of delay lines may offer cost or size advantages in certain applications, where integrated circuit implementations of the four-stage topology can ensure performance tracking of devices.

A large number of linearization approaches have been proposed, including feedforward [3]-[4], Linear Amplification Using Nonlinear Components (LINC)[5], Digital Predistortion[6], Envelope Elimination and Restoration (EER)[3], and others [7]-[9]. These competing techniques have different advantages and disadvantages in cost, complexity, signal processing overhead, component phase or time delay matching, etc. Further, cross-coupled CMOS amplifiers are a form of the earlier two-stage topology that is useful in integrated circuit applications [10]-[12]. However, the polynomial approaches used in analysis of the cross-coupled devices offer less insight than the present methods for alternative topology development. The proposed approach is based on a more generic spectral viewpoint, where nonlinear components of the frequency spectrum are considered throughout the system and cancelled at the final output.

In the following, linearization conditions for a two stage topology are first presented for variable input and output coupling coefficients. Using the same general approach, linearization conditions are then derived for a four stage topology.

2. Linearization Conditions

The basic two-stage linearization topology is given in Fig. 1, following earlier results [1]-[2]. The input signal P_{in} is first divided into two signals P1in and P2in by coupler C1. Each output of the coupler is the applied to one of the

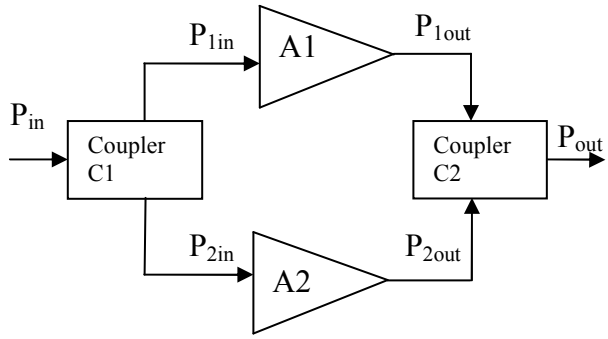

Fig. 1. Two-stage topology. Input signal P_{in} splits into two signals, P_{1in} and P_{2in}, which are applied to inputs of nonlinear amplifiers A1 and A2. The output signals from the A1 and A2, P_{1out} and P_{2out}, are recombined in coupler C2 to form the final output signal P_{out}.

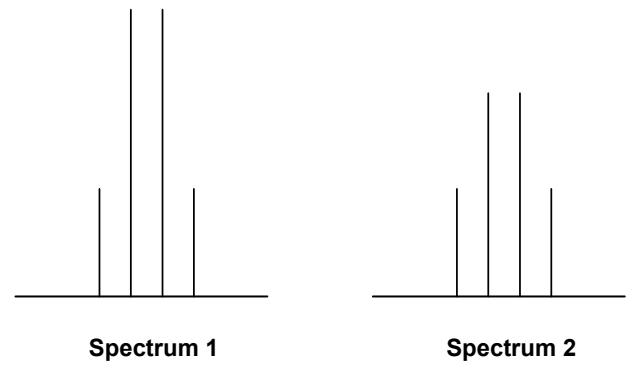

Fig. 2. Illustration of frequency spectra at the output of two amplifiers where two outermost spectral lines in each spectrum represent third order distortion products.

inputs of the two amplifiers, A1 and A2. The two amplifier outputs, signals P1out and P2out, are recombined in the output coupler C2 to form the final output P_{out}. Typically, either the input coupler or the output coupler will include a 180 degree phase shift so that the undesired nonlinearities are cancelled in the output. Finally, note that although two amplifiers are shown in Fig. 1, other nonlinear devices could be used.

To develop the conditions for linearization, consider the situation where two-tone input signals are applied to amplifiers A1 and A2. Under these conditions, the output spectra of amplifiers A1 and A2 may appear as illustrated in Fig. 2. In each spectrum of Fig. 2, the two innermost spectral lines represent the two original input frequencies, and the two outermost spectral lines in each spectrum represent third order distortion products. The power level of the outermost spectral lines corresponding to the third-order two-tone intermodulation distortion for each amplifier may be calculated as

$$P3 = OIP3 - 3(OIP3 - P_{out}) \ , \qquad (1)$$

where P_{out} is the linear output power level in dBm (innermost spectral lines), P3 is the output power level of the third order distortion in dBm (outermost spectral lines), and OIP3 is the output third order intercept of the device in dBm [3].

Returning to Fig. 1, define the coupling coefficient of coupler C1 to be $K_1 = P_{2in} - P_{1in}$ where K_1 is in dB and P1in and P_{2in} are in dBm. Next, K_2 defines the coupling coefficient of coupler C2 where the output signal of C2 in dBm due to signal P_{2out} is equal to $P_{2out}+K_2$, and where the output signal of C2 due to signal P_{1out} is equal to P_{1out}. The total output of C2 is then $P_{2out}+K_2+P_{1out}$. Then, the third order output distortion level of amplifier A1 is

$$P3_1 = OIP3_1 - 3(OIP3_1 - (P_{1in} + G_1), \qquad (2)$$

where $P3_1$ is the output power level of the third order distortion in dBm for amplifier A1, $OIP3_1$ is the output third order intercept point of A1, and G_1 is the gain of A1. Since $P_{2in} = P_{1in} + K_1$, the third order output distortion level of amplifier A2 is

$$\begin{aligned} P3_2 &= OIP3_2 - 3(OIP3_2 - (P_{2in} + G_2)) \\ &= OIP3_2 - 3(OIP3_2 - (P_{1in} + K_1 + G_2)) \end{aligned} \qquad (3)$$

where $P3_2$ is the output power level of the third order distortion in dBm for amplifier A2, $OIP3_2$ is the output third order intercept point of A2, and G_2 is the gain of A2.

Further, assume that output coupler C2 subtracts the two signals, combining P_{1out} and P_{2out} 180 degrees out of phase. When the power levels of the distortion are equal at the final output P_{out}, the third order distortion is then cancelled. Therefore, third order distortion is cancelled when $P3_2 + K_2 = P3_1$ at the output of coupler C2. Substituting into this equation from Eqs. (2) and (3), third order nonlinearity is cancelled when

$$3(G_1 - G_2 - K_1 - K_2) = 2(OIP3_1 - OIP3_2 - K_2), \qquad (4)$$

where $G_1 \neq G_2+K_2+K_2$, such that the desired linear signal is not cancelled along with the nonlinear distortion. The amount of signal loss due to the subtraction that occurs in coupler C2 is reduced when $G_1 >> G_2 + K_1 + K_2$.

Although the foregoing analysis is for third order nonlinearity, the results can be readily extended for other nonlinearities. In this, the analysis proceeds as above except that Eq. (1) is replaced by the corresponding equation for the order of the nonlinearity. For the example

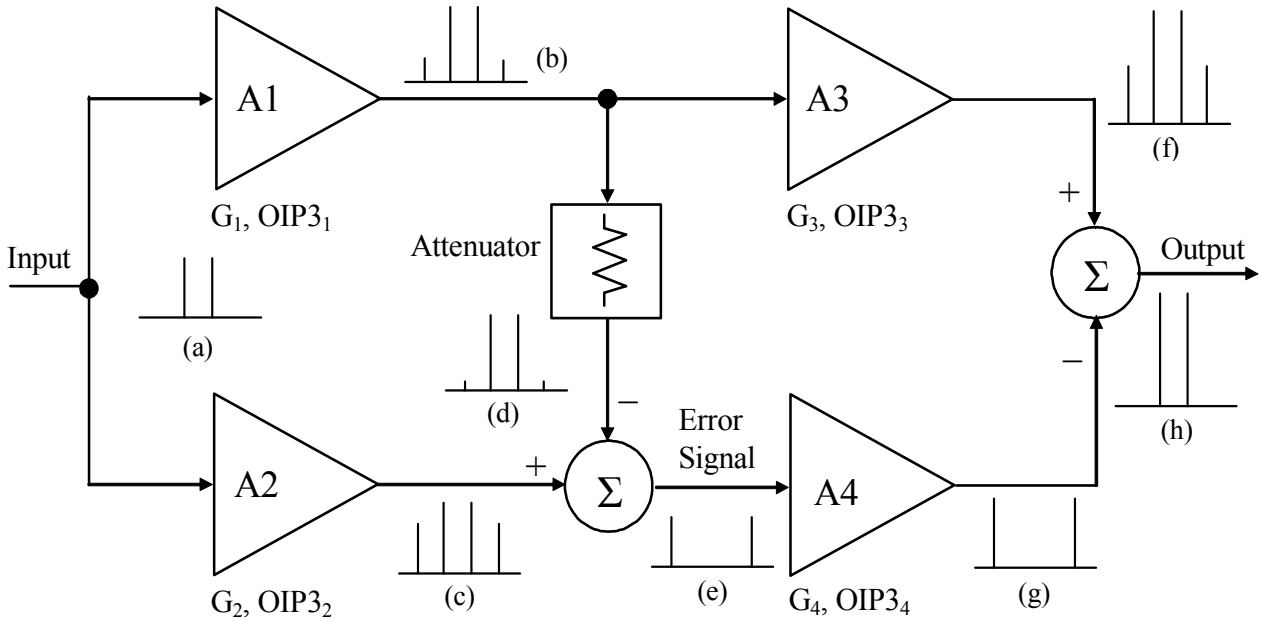

Figure 3. Four-stage topology with frequency spectra illustrated at various points.

of fifth order nonlinearity, Eq. (1) would become P5=OIP5-5(OIP5- P_{out}), and so forth.

The foregoing linearization conditions can be demonstrated with a simple example. First, consider the particular case of G_1=23 dB and $OIP3_1$=30 dBm, and G_2=15 dB and $OIP3_2$=15 dBm, K1= -1 dB, K2= -3 dB which satisfy Eq. (4). Next, let the input signal to amplifier A1 be -10 dBm, which also results in an input to amplifier A2 of -10 + K_1 = -11 dBm. The third order distortion level at the output of A1 is then 30 - 3(30 - (-10 + 23)) = -21 dBm. At the output of A2, third order distortion is 15 - 3(15 - (-11 + 15)) = -18 dBm. After the passing through coupler C2, the output level due to A2 becomes -18 + K_2 = -21 dBm. Thus, the third order distortion is canceled when the two signals are added 180-degrees out of phase in the second coupler C2. The desired signal is not canceled, since the desired linear components of the signal are of unequal amplitude at the final output. In the present example, the linear signal outputs for the two amplifiers are -10 + G_1 = 13 dBm for the first stage and -10 + K_1 +K_2 +G_2 = 1 dBm for the second stage. It is also important to observe that the cancellation of distortion is not dependent input signal level, since the third order distortion levels for both stages change 3 dB for each dB change in the input signal.

3. Four-Stage Linearization Conditions

The preceding analysis for the two-stage topology of Fig. 1 is readily extended to the four-stage linearization topology of Fig. 3. This four-stage topology is essentially a feedforward linearization topology, except that delay lines are replaced by amplifiers having matched delay. One particular advantage of the approach in Fig. 3 is that it is well-suited to integrated circuit implementation, since the constituent components may be well-matched and no bulky passive microwave couplers are employed.

In Fig. 3, a two-tone input spectrum is illustrated in spectrum (a). At the output of amplifiers A1 and A2, spectra (b) and (c) have outermost spectral lines representing third order nonlinear distortion, with the innermost lines representing the original input frequencies. Error spectrum (e) is formed by subtracting an attenuated version of spectrum (b) from (c). By careful selection of the gains and intercept points of all four stages in Fig. 3, the third-order distortion present in spectrum (f) can be cancelled by subtracting compensating signal spectrum (g) to form a final output spectrum (h) devoid of third order distortion. As illustrated in (e), the signal amplitude is reduced to zero in the error signal, although it does not necessarily need to be reduced to zero. In any event, it is preferable that the distortion is the dominant component of the signals of spectra (e) and (g). Such removal of the desired-signal component of the spectrum at (e) prevents saturation of the error amplifier (A4) in the bottom right of Fig. 3.

A detailed analysis of the linearization conditions for the four-stage topology of Fig. 4 follows the same general procedure as set forth in the preceding section for the two stage topology. However, the large number of free parameters in Fig. 4 leads to many possible different

solutions for the linearization conditions. Nevertheless, it is instructive to consider a simplified analysis of the conditions for linearization of the topology shown in Fig. 3. To illustrate one possible approach to the analysis of Fig. 3, the case of a power amplifier application is considered below. To avoid unduly complicating the present discussion, several simplifying assumptions are used. Exact solutions, without simplifying assumptions, can be readily implemented on computer.

First, let the power amplifier stage be amplifier A3, and let the primary signal path be through A1 and A3. In this case, it may then reasonable to further assume that the output nonlinearities are primarily produced by power amplifier A3 and its associated output intercept point in dBm, $OIP3_3$. Then, for an input signal level P_{in} dBm, the output level at A3 is $P_{3o}=P_{in}+G_1+G_3$, where G_1 and G_3 are the gains in dB of A1 and A3. Then, the third order distortion at the output of A3 is approximately

$$P3_3 = OIP3_3 - 3(OIP3_3 - (P_{in} + G_1 + G_3)), \qquad (5)$$

where $P3_3$ is the output power level of the third order distortion in dBm for amplifier A3 as illustrated in spectrum (f).

Second, let the linear signal levels at (c) and (d) in Fig. 3 be equal, so that there is only distortion present in spectrum (e). This restriction sets $G_2=G_1+K$, where K is the gain of the attenuator in dB.

Third, let the dominant distortion contributing to spectrum (e) be the distortion at the output of A2, and let A4 not contribute additional distortion. Then, the third order nonlinear distortion at the output of A4 is approximately

$$P3_4 = G_4 + OIP3_2 - 3(OIP3_2 - (P_{in} + G_2)), \qquad (6)$$

where $P3_4$ is the output power level of the third order distortion in dBm for amplifier A4 as illustrated in spectrum (g).

Given the foregoing simplifying assumptions for this power amplifier example, the third order nonlinearities would be cancelled under the conditions that the distortion at the outputs of amplifiers A3 and A4 are equal, or $P_{3A3} = P_{3A4}$. Substituting from Eqs. (5) and (6), the conditions for linearization of the power amplifier under the foregoing assumptions

$$OIP3_3 - 3(OIP3_3 - (P_{in} + G_1 + G_3)) = G_4 + OIP3_2 - 3(OIP3_2 - (P_{in} + G_2))$$

or, rearranging,

$$3(G_1 + G_3 - G_2) - G_4 = 2(OIP3_3 - OIP3_2), \qquad (7)$$

where P_{in} was eliminated from the final result.

The foregoing linearization conditions can be illustrated with a simple example. In the following, a number of simplifying assumptions are used to avoid an overcomplicated discussion. More exact results can be obtained through computer simulation.

First, consider the particular case where G_1 = 10 dB, OIP_1 = 30 dBm, K = -10 dB, G_2 = 0 dB, $OIP3_2$ = 10 dBm, G_3 = 20 dB, $OIP3_3$ = 40 dBm, G_4 = 30 dB, and $OIP3_4$ = 26 dBm. Also, note that these values for intercept points and gains satisfy Eq. (7). For these parameters, let the input to the system of Fig. 3 be a two-tone signal at -5 dBm. The output of amplifier A1 will then be 5 dBm with third distortion level at -45dBm, and the output of amplifier A2 will be -5 dBm with third order distortion of -35 dBm. Next, the output of A1 passes through the attenuator and results in an attenuator output of -5 dBm with third order distortion of -55 dBm. Then, the outputs of the attenuator and amplifier A2 are subtracted, cancelling the -5dBm linear signal, to produce the error signal. Since the third order output of the attenuator is 20 dB below the level of the third order output of A2, assume that the error signal equals the -35 dBm third order output level of amplifier A2, for simplicity. This error signal is amplified to a level of -5dBm at the output of amplifier A4. The output of A1 is also amplified in amplifier A3 and will be 25 dBm with third order distortion of -5dBm. In this, the amplified third order output of A1 is 20 dB below the third order created in A3, and omitted for simplicity. Thus, the third order distortion levels at the outputs of amplifier A3 and A4 are both -5 dBm, and are therefore cancelled after subtraction at the final output in Fig. 3. Finally, note that many solutions are possible since there are a large number of free parameters.

4. Conclusion

A simple set of conditions is provided for linearization of a two-stage circuit topology, with the added free variables of unequal signal coupling at the input and output, and with an outline of extensions for other order nonlinearities. The resulting conditions are simple equations relating the gains, intercept points, and coupling coefficients of the circuit. Although there are many solutions for linearization conditions of a four-stage topology, simplified linearization conditions were presented for a power amplifier application. With a few simplifying assumptions, a simple set of linearization conditions was derived for the four-stage topology. By following the described approach to the problem, detailed analysis of linearization conditions can be readily implemented on a computer without simplifying assumptions.

5. References

[1] T. P. Weldon, "Using Amplifiers with Poor Linearity to Linearize Amplifiers with Good Linearity," *2003 IEEE MTT-S Int. Microwave Symp. Dig.*, June 2003, pp. 1741-1744.

[2] T. P. Weldon, D. T. Lieu, and M. J. Davis, ``Experimental Results at One GHz on Linearizing an NMOS Transistor with a Parallel PMOS Transistor," *2005 IEEE Radio Frequency IC Symposium*, June 2005, pp. 233- 236.

[3] Allen Katz, "Linearization: Reducing Distortion in Power Amplifiers," *IEEE Microwave Magazine*, 2:4, Dec. 2001, pp. 37-49.

[4] E. Eid, F. M. Ghannouchi, F. Beauregard, "Optimal Feedforward Linearization System Design," *Microwave Journal,* November 1995, pp 78-86.

[5] D. C. Cox, "Linear amplification with nonlinear components," *IEEE Trans. On Communications,* December 1974, pp. 1942-1945.

[6] F. Zavosh, D. Runton, C. Thron, "Digital Predistortion Linearizes RF PAs," *Microwaves & RF*, August 2000, pp. 96-106.

[7] F.H. Raab, P. Asbeck, S. Cripps, et al., "Power Amplifiers and Transmitters for RF and Microwave," *IEEE Trans. on Microwave Theory and Techniques*, March 2002, pp. 814 – 826.

[8] P. B. Kenington, "Methods Linearize RF Transmitters And Power Amps, Part 1," *Microwaves & RF*, December 1998, pp. 102-116.

[9] Johansson, M. and Mattson, T., Transmitter linearization using Cartesian feedback for linear TDMA modulation," *Proc. 41st IEEE Vehicular Technology Conference*, pp. 439-444, May 1991.

[10] H. Khorramabadi and P.R.Gray. "High-Frequency CMOS Continuous-Time Filters," *IEEE J. Solid State Circuits*, Dec. 1984, pp. 939-948.

[11] C. Toumazou, F. J. Lidgey, and D.G. Haigh, Editors, *Analogue IC Design: the current mode approach*, Peter Peregrinus Ltd., United Kingdom, 1993.

[12] A. Lewinski, J. Silva-Martinez, "OTA linearity enhancement Technique for High Frequency Applications with IM3 Below -65 dB," *IEEE Trans. on Circuits and Systems II: Analog and Digital Signal Processing*, Oct. 2004, pp. 542-548.